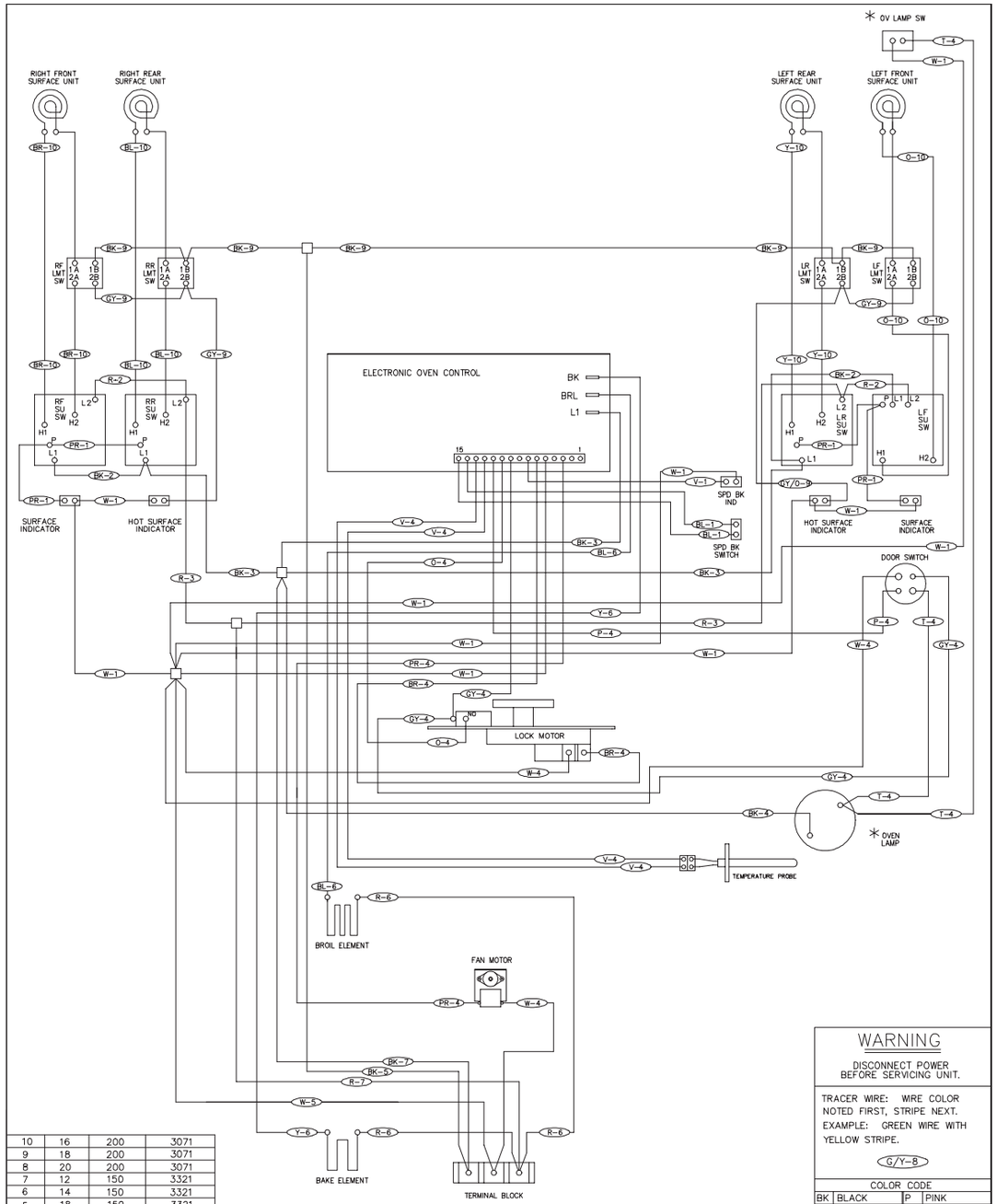

WIRE	AWG	TEMP°C	UL STYLE
10	16	200	3071
9	18	200	3071
8	20	200	3071
7	12	150	3321
6	14	150	3321
5	18	150	3321
4	20	150	3321
3	14	105	1015
2	16	105	1015
1	20	105	1015

316255179

WARNING

DISCONNECT POWER BEFORE SERVICING UNIT.

TRACER WIRE: WIRE COLOR NOTED FIRST, STRIPE NEXT. EXAMPLE: GREEN WIRE WITH YELLOW STRIPE.

G/Y-8

COLOR CODE			
BK	BLACK	P	PINK
BL	BLUE	PR	PURPLE
BR	BROWN	R	RED
C	COPPER	T	TAN
G	GREEN	V	VIOLET
GY	GRAY	W	WHITE
O	ORANGE	Y	YELLOW

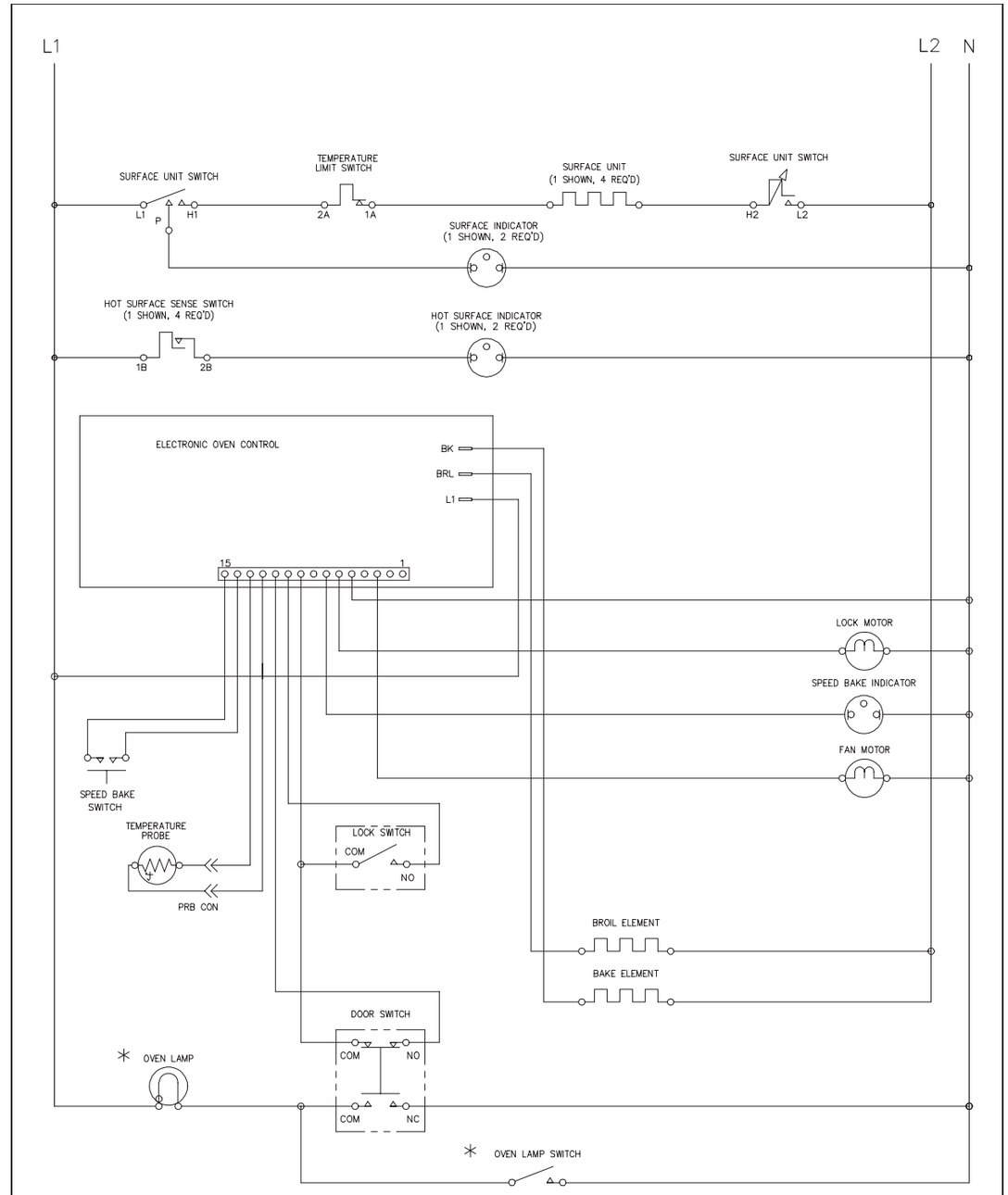

NOTES:

1. CIRCUIT SHOWN WITH ALL CONTROLS SET TO OFF. OVEN DOOR CLOSED AND UNLOCKED.
2. COMPONENTS WITH * DO NOT APPEAR ON ALL MODELS.

316255179