SERVICE DATA SHEET

Electric Ranges with ES 200/205/300 & 305 Electronic Oven Controls

NOTICE - This service data sheet is intended for use by persons having electrical and mechanical training and a level of knowledge of these subjects generally considered acceptable in the appliance repair trade. The manufacturer cannot be responsible, nor assume any liability for injury or damage of any kind arising from the use of this data sheet.

SAFE SERVICING PRACTICES

To avoid the possibility of personal injury and/or property damage, it is important that safe servicing practices be observed. The following are examples, but without limitation, of such practices.

1. Before servicing or moving an appliance remove power cord from electrical outlet, trip circuit breaker to OFF, or remove fuse.
2. Never interfere with the proper installation of any safety device.
3. GROUNDING: The standard color coding for safety ground wires is *GREEN* or *GREEN WITH YELLOW STRIPES*. Ground leads are not to be used as current carrying conductors. **It is extremely important that the service technician reestablish all safety grounds prior to completion of service. Failure to do so will create a potential safety hazard.**
4. Prior to returning the product to service, ensure that:
   - All electric connections are correct and secure.
   - All electrical leads are properly dressed and secured away from sharp edges, high-temperature components, and moving parts.
   - All uninsulated electrical terminals, connectors, heaters, etc. are adequately spaced away from all metal parts and panels.
   - All safety grounds (both internal and external) are correctly and securely reassembled.

E.O.C. Control Connections

P5 Connections

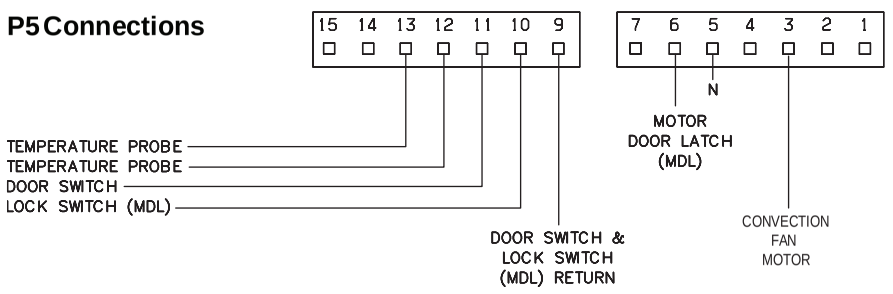

Resistance Temperature Detector

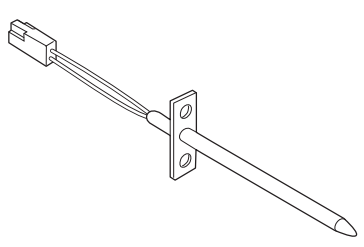

IMPORTANT

DO NOT REMOVE THIS BAG OR DESTROY THE CONTENTS

WIRING DIAGRAMS AND SERVICE INFORMATION ENCLOSED

REPLACE CONTENTS IN BAG

p/n 316905233(1110)

Oven Calibration

Set the electronic oven control for normal baking at 350°F. Obtain an average oven temperature after a minimum of 5 cycles. Press **Stop or Clear** to end bake mode.

Temperature Adjustment

1. Set EOC to bake at 550°F.
2. Within 5 seconds of setting 550°F, press and hold the bake pad for approximately 15 seconds until a single beep is heard (longer may cause **F11** shorted keypad alarm).
3. Calibration offset should appear in the display.
4. Use the slew keys to adjust the oven temperature up or down 35°F in 5°F increments.
5. Once the desired (-35° to 35°) offset has been applied, press **Stop or Clear**.

Note: Changing calibration affects normal Bake mode. The adjustments made will not change the Self-Cleaning cycle temperature.

Simmer Select PCB (some models)

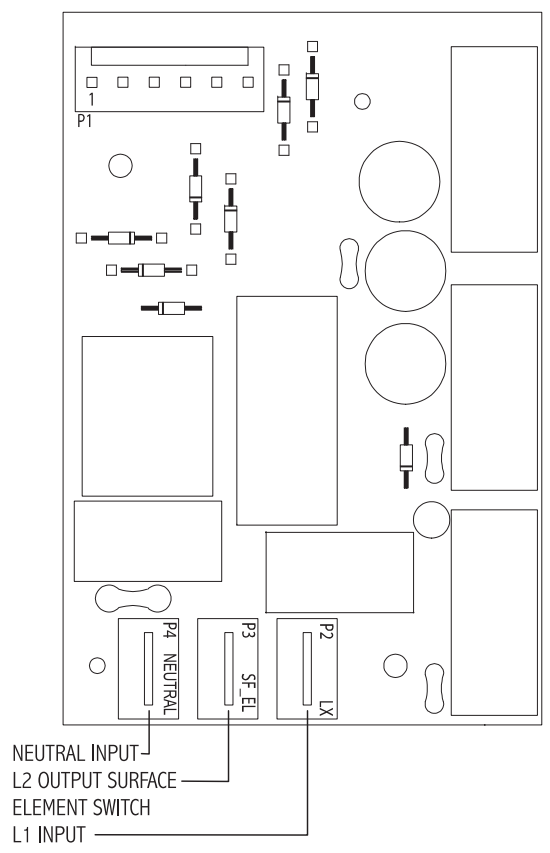

RTD SCALE	
Temperature (°F)	Resistance (ohms)
32 ± 1.9	1000 ± 4.0
75 ± 2.5	1091 ± 5.3
250 ± 4.4	1453 ± 8.9
350 ± 5.4	1654 ± 10.8
450 ± 6.9	1852 ± 13.5
550 ± 8.2	2047 ± 15.8
650 ± 9.6	2237 ± 18.5
900 ± 13.6	2697 ± 24.4

Electronic Oven Control (Rear View)

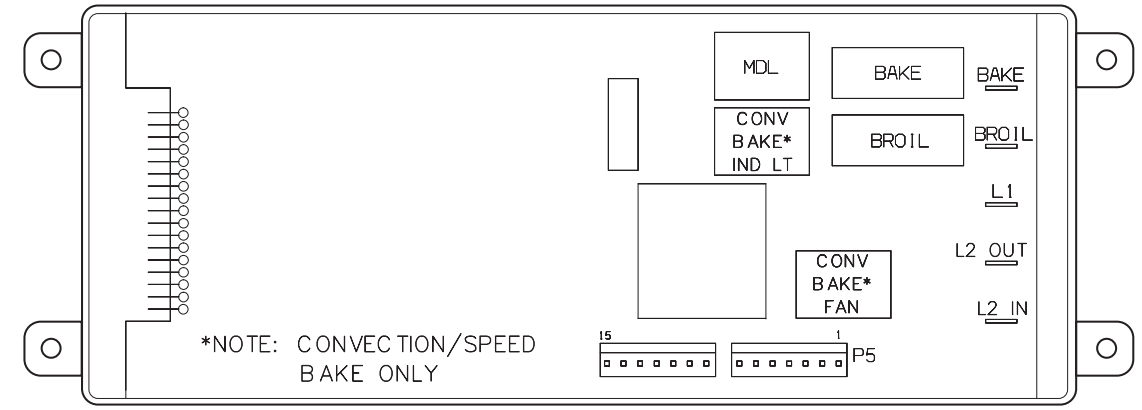

Electronic Oven Control Fault Code Descriptions

Fault Code	Likely failure condition/cause	Suggested Corrective Action
F10	Runaway temperature. Oven heats when no cook cycle is programmed.	**If Oven is cold:** 1. If fault code is present with cold oven test oven temperature sensor probe circuit resistance. Use RTD scale found in the tech sheet. 2. Replace probe or repair wiring connections if defective. 3. If temperature sensor probe circuit is good but fault code remains when oven is cold replace the EOC. **If Oven is overheating:** 1. If oven is severely overheating/heating when no cook cycle is programmed test oven temperature sensor probe circuit resistance using the RED scale found in the service tech sheet. Also verify that the temperature sensor probe in properly installed in the oven cavity. 2. Disconnect power from the range, wait 30 seconds and reapply power. If oven continues to heat when the power is reapplied, replace the EOC. **NOTE:** Severe overheating may require the entire oven to be replaced should damage be extensive.
F11	Shorted keypad or selector switch.	1. Reset power supply to range - Disconnect power, wait 30 seconds and reapply power. 2. Check/reseat ribbon harness connections between touch panel and EOC. 3. Test keyboard circuits. Replace touch panel if defective. 4. If keyboard ciruits check good replace the EOC.
F12 F13	EOC Internal software error or failure.	Disconnect power, wait 30 seconds and reapply power. If fault returns upon power-up, replace EOC.
F30 F31	Open oven sensor probe circuit. Shorted oven sensor probe circuit.	1. (F30) Check resistance at room temperature & compare to RTD Sensor resistance chart. If resistance is correct replace the EOC. If resistance does not match the RTD chart replace RTD Sensor Probe. Check Sensor wiring harness between EOC & Sensor Probe connector. 2. (F31) Check resistance at room temperature, if less than 500 ohms, replace RTD Sensor Probe. Check for shorted Sensor Probe harness between EOC & Probe connector. If resistance is correct replace the EOC.
F90 F91 F92 F93 F94 F95	Door lock motor or latch circuit failure.	**If lock motor runs:** 1. Test continuity of wiring between EOC and lock switch on lock motor assy. Repair if needed. 2. Advance motor until cam depresses the plunger on lock motor switch. Test continuity of switch contacts. If switch is open replace lock motor assemblyy. 3. If motor runs and switch contacts and wiring harness test good, replace the EOC. **If lock motor does not run:** 1. Test continuity of lock motor windings. Replace lock motor assembly if windings are open. 2. Test lock motor operation by using a test cord to apply voltage. If motor does not operate replace lock motor assy. 3. If motor runs with test cord check continuity of wire harness to lock motor terminals. If harness is good replace the EOC.

Circuit Analysis Matrix

	EOC Relays				
	L1 to Bake	L1 to Broil	L1 to Motor Door Latch	Door Switch COM-NO	Warmer Drawer Lock Switch (Motor Door Latch)
Bake/Time Bake	X	X*			X
Broil		X			X
Clean	X				
Unlocked					X
Locking			X		X
Locked					
Unlocking			X		X
Door Open					
Door Closed				X	

Note: X=Check listed circuits. *=Alternates with Bake element.
Please note that the Warmer Drawer feature is only for some models.

GENERAL TROUBLESHOOTING DIAGRAM

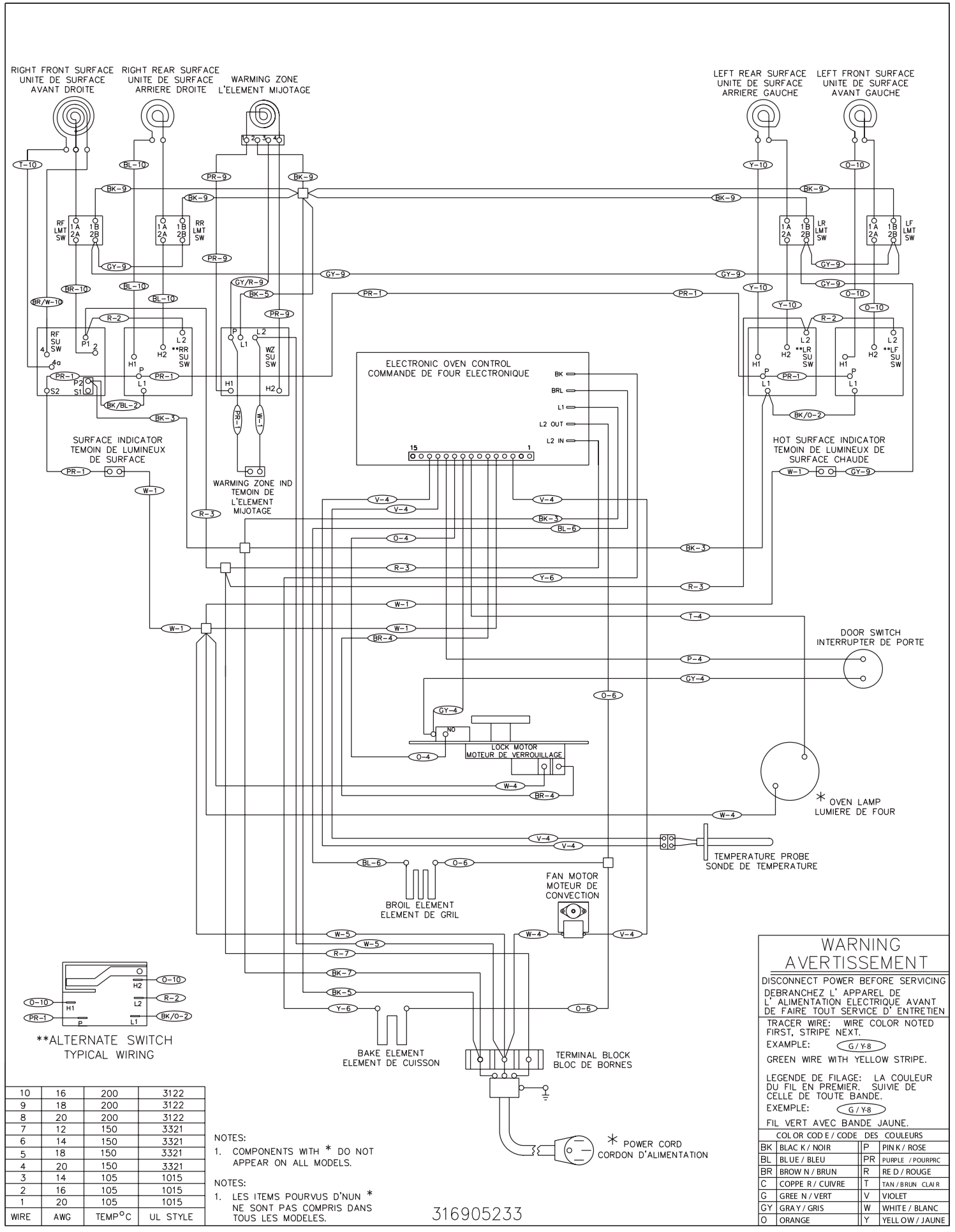

10	16	200	3122
9	18	200	3122
8	20	200	3122
7	12	150	3321
6	14	150	3321
5	18	150	3321
4	20	150	3321
3	14	105	1015
2	16	105	1015
1	20	105	1015
WIRE	AWG	TEMP°C	UL STYLE

NOTES:
1. COMPONENTS WITH * DO NOT APPEAR ON ALL MODELS.

NOTES:
1. LES ITEMS POURVUS D'NUN * NE SONT PAS COMPRIS DANS TOUS LES MODELES.

316905233

WARNING
AVERTISSEMENT

DISCONNECT POWER BEFORE SERVICING
DEBRANCHEZ L' APPAREL DE L' ALIMENTATION ELECTRIQUE AVANT DE FAIRE TOUT SERVICE D' ENTRETIEN

TRACER WIRE: WIRE COLOR NOTED FIRST, STRIPE NEXT.
EXAMPLE: G / Y-8
GREEN WIRE WITH YELLOW STRIPE.

LEGENDE DE FILAGE: LA COULEUR DU FIL EN PREMIER. SUIVIE DE CELLE DE TOUTE BANDE.
EXEMPLE: G / Y-8
FIL VERT AVEC BANDE JAUNE.

COLOR CODE / CODE DES COULEURS			
BK	BLACK / NOIR	P	PINK / ROSE
BL	BLUE / BLEU	PR	PURPLE / POURPRE
BR	BROWN / BRUN	R	RED / ROUGE
C	COPPER / CUIVRE	T	TAN / BRUN CLAIR
G	GREEN / VERT	V	VIOLET
GY	GRAY / GRIS	W	WHITE / BLANC
O	ORANGE	Y	YELLOW / JAUNE

GENERAL TROUBLESHOOTING SCHEMATIC

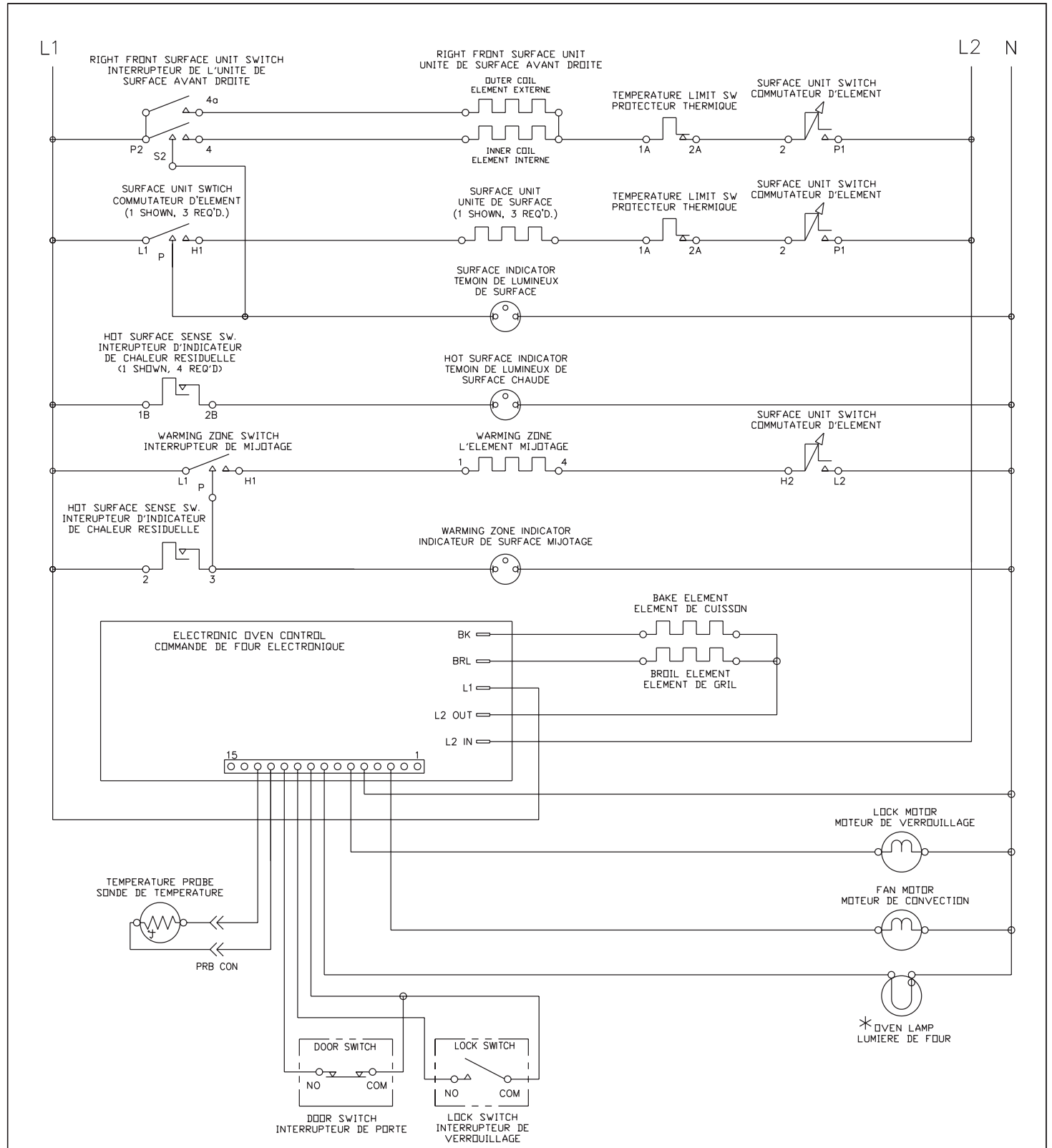

NOTES:
1. CIRCUIT SHOWN WITH ALL CONTROLS SET TO OFF.
2. COMPONENTS WITH * DO NOT APPEAR ON ALL MODELS.

NOTES:
1. ILLUSTRATION DE CIRCUIT AVEC TOUTES LES COMMANDES REGLEES A OFF. PORTE DE FOUR FERMEE ET DEVERROUILLEE.
2. LES ITEMS POURVUS D'NUN * NE SONT PAS COMPRIS DANS TOUS LES MODELES.

316905233